Indice	*Index*	Pag. *Page*
Caratteristiche tecniche	*Technical features*	**M2**
Designazione	*Classification*	**M2**
Versioni	*Versions*	**M2**
Simbologia	*Symbols*	**M2**
Lubrificazione	*Lubrication*	**M3**
Posizione di montaggio	*Mounting position*	**M3**
Dati tecnici	*Technical data*	**M4**
Dimensioni	*Dimensions*	**M8**
Accessori	*Accessories*	**M10**
Optional	*Options*	**M10**

Questa sezione annulla e sostituisce ogni precedente edizione o revisione. Qualora questa sezione non Vi sia giunta in distribuzione controllata, l'aggiornamento dei dati ivi contenuto non è assicurato. **In tal caso la versione più aggiornata è disponibile sul nostro sito internet www.transtecno.com**

This section replaces any previous edition and revision. If you obtained this catalogue other than through controlled distribution channels, the most up to date content is not guaranteed. ***In this case the latest version is available on our web site www.transtecno.com***

Caratteristiche tecniche / *Technical features*

I motovariariduttori della serie CMV hanno le seguenti caratteristiche principali:

- Precisione nella regolazione della velocità, contenuta in ± 0.5/1%.
- Campo di regolazione continuo 1:5.
- Le grandezze CM040, 050, 063, 075, 090 e 110 sono costruite con carcassa in alluminio, la grandezza 130 ha la carcassa in ghisa.
- Le grandezze VAM018, 037 e 075 sono costruite con carcassa in alluminio, le altre grandezze in ghisa

CMV mechanical variators and wormgearboxes main features:

- *Precision in speed regulation: ± 0.5/1%*
- *Speed range 1:5*
- *Die-cast aluminum housing on CM040, 050, 063, 075, 090 and 110. Cast iron housing on CM130.*
- *Die-cast aluminum housing on VAM018, 037 and 075. Cast iron housing on the other sizes.*

Designazione / *Classification*

MOTOVARIARIDUTTORE / *MECHANICAL VARIATOR AND GEARBOX*

CMV	040/037	FD	20	SZDX	BRSX	90	B3/1	VS
Tipo *Type*	Grandezza *Size*	Versione *Version*	Rapporto *Ratio*	Albero di uscita *Output shaft*	Braccio di reazione *Torque arm*	Angolo *Angle*	Pos. di montaggio *Mounting position*	Opzioni *Options*
CMV	**040/018** **—** **130/40**	**U** **FD** **FS** **FBD** **FBS** **FLD** **FLS**	vedi tabelle *see tables*	**SZDX** **SZSX** **DZ**	**BRDX** **BRSX**	**0°** **90°** **180°** **270°**	Vedi pag. L3 *See page L3*	**VS**

MOTORE / *MOTOR*

0.37kW	4p	3ph	50Hz	T1
Potenza *Power* Vedi tabelle *See tables*	Poli *Poles* **2p** **4p**	Fasi *Phases* **1ph** **3ph**	Frequenza *Frequency* **50Hz** **60Hz**	Pos. morsettiera *Terminal box pos.* Vedi pag. L3 *See page L3*

Versione Riduttore
Gearbox Version

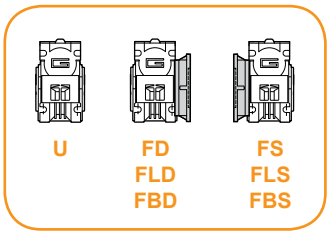

Albero di uscita
Output shaft

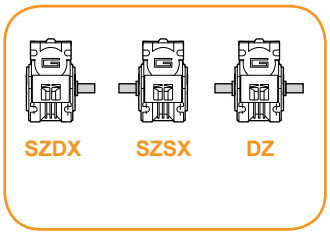

Braccio di reazione
Torque arm

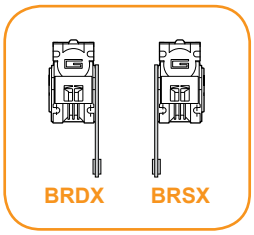

Angolo
Angle

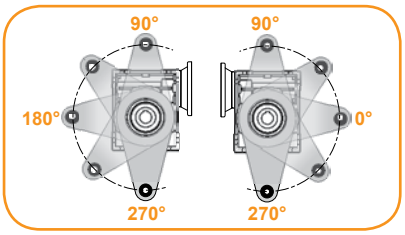

Simbologia / *Symbols*

n_1	[min^{-1}]	Velocità in ingresso / *Input speed*
n_2	[min^{-1}]	Velocità in uscita / *Output speed*
i		Rapporto di riduzione / *Ratio*
P_1	[kW]	Potenza in entrata / *Input power*
M_2	[Nm]	Coppia in uscita in funzione di P_1 / *Output torque referred to P_1*
sf		Fattore di servizio / *Service factor*
R_2	[N]	Carico radiale ammissibile in uscita / *Permitted output radial load*
A_2	N]	Carico assiale ammissibile in uscita / *Permitted output axial load*

Lubrificazione

Lubrification

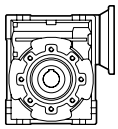

CM

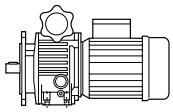

VAM

	Quantità di olio (litri) / ***Oil quantity*** *(litres)*						
	B3	**B8**	**B6**	**B7**	**V5**	**V6**	
CM040	0.07						Lubrificati a vita *Life lubricated*
CM050	0.1						
CM063	0.25						
CM075	0.4						
CM090	0.7						
CM110	1.1						
CM130	4.5	3.3	3.5	3.5	4.5	3.3	

	Quantità di olio (litri) / **Oil quantity** *(litres)*					
	VAM					
	018	**037**	**075**	**15**	**22**	**40**
B5	0.13	0.15	0.33	0.80	1.20	1.20
V1	0.30	0.40	0.85	1.40	2.15	2.15
V3	0.13	0.15	0.33	0.80	1.20	1.20

Posizioni di montaggio

Mounting positions

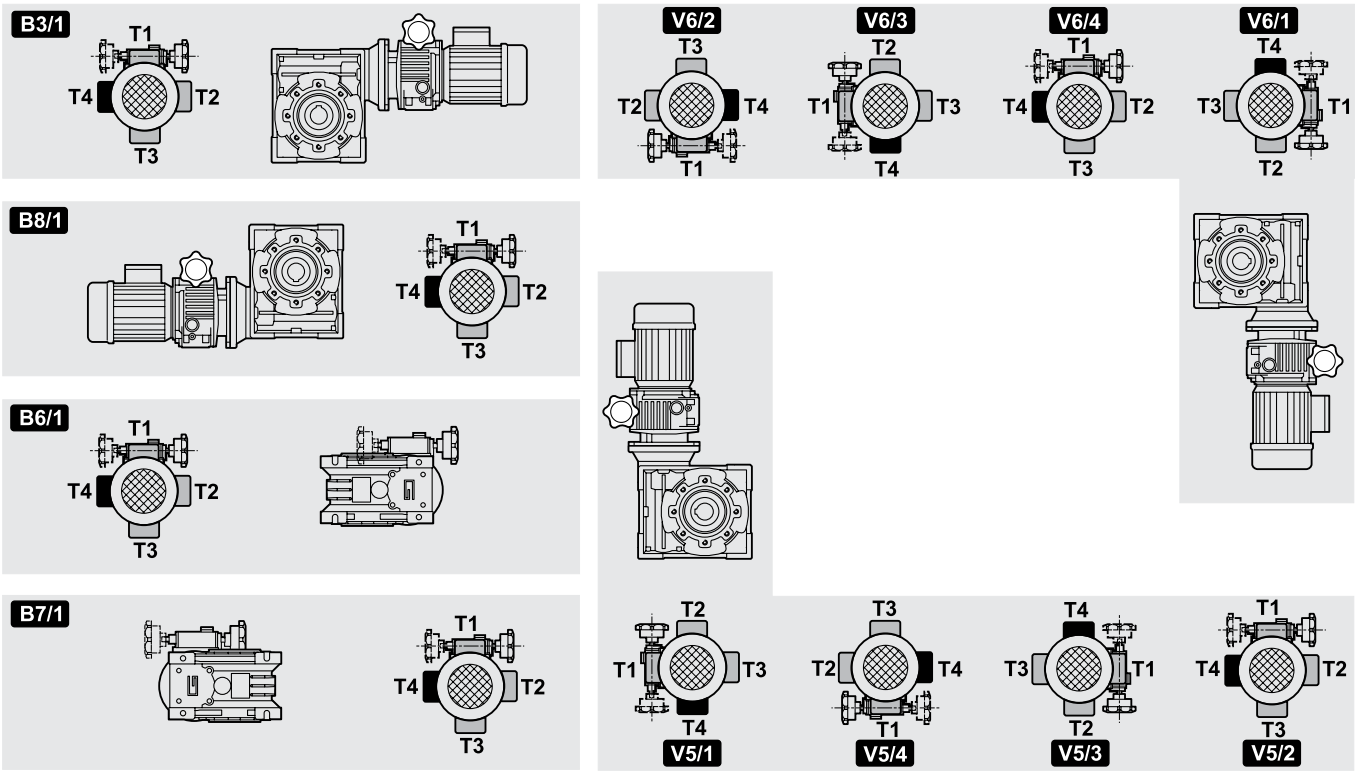

Carichi radiali

Radial loads

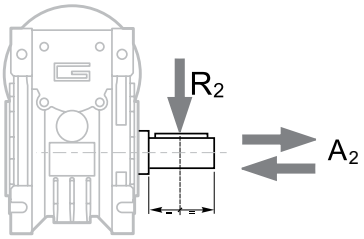

$A_2 = R_2 \times 0.2$

n_2 [min^{-1}]	R_2 [N]						
	CM040	CM050	CM063	CM075	CM090	CM110	CM130
187	1264	1770	2445	2824	3161	5058	5732
140	1392	1949	2692	3110	3481	5570	6313
93	1596	2234	3085	3564	3990	6384	7235
70	1754	2456	3392	3918	4386	7018	7953
56	1890	2646	3654	4221	4725	7560	8567
47	2004	2805	3874	4475	5009	8014	9083
35	2210	3095	4273	4937	5526	8842	10021
28	2381	3334	4603	5318	5953	9524	10794
23	2542	3559	4915	5678	6356	10170	11526
18	2759	3862	5334	6162	6897	11036	12507
14	3000	4200	5800	6700	7500	12000	13600

Quando il carico radiale risultante non è applicato sulla mezzeria dell'albero occorre calcolare quello effettivo con la seguente formula:

When the resulting radial load is not applied on the centre line of the shaft it is necessary to calculate the effective load with the following formula:

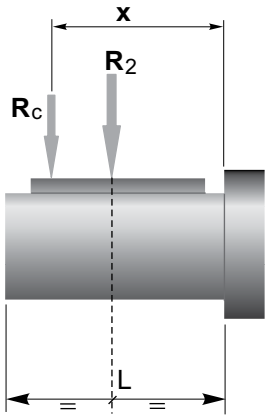

	CM						
	040	050	063	075	090	110	130
a	84	101	120	131	182	176	188
b	64	76	95	101	122	136	148
R_{2MAX}	3000	4200	5800	6700	7500	12000	13600

$$R_c = \frac{R_2 \cdot a}{(b + x)} \leq R_{2MAX}$$

$$R \leq R_c$$

a, b = valori riportati nella tabella
a, b = values given in the table

Dati tecnici

Technical data

P_1 [kW]	velocità massima *max speed* n_2 [min^{-1}]	M_2 [Nm]	sf	velocità minima *min speed* n_2 [min^{-1}]	M_2 [Nm]	sf	i	
0.22								
63C4 n_1=1400 [min^{-1}]	**176**	8	*5.6*	**34.0**	15	*5.2*	5	**CMV 040/018**
	117	12	*4.3*	**22.7**	22	*3.8*	7.5	
	88.0	16	*3.3*	**17.0**	29	*2.9*	10	
	58.7	22	*2.5*	**11.3**	39	*2.2*	15	
	44.0	28	*1.6*	**8.5**	51	*1.5*	20	
	35.2	33	*1.3*	**6.8**	61	*1.1*	25	
	29.3	38	*1.5*	**5.7**	65	*1.4*	30	
	22.0	46	*1.1*	**4.3**	79	*0.9*	40	
	17.6	54	*0.8*	**3.4**	89	*0.8*	50	
	22.0	47	*1.8*	**4.3**	81	*1.7*	40	**CMV 050/018**
	17.6	56	*1.4*	**3.4**	91	*1.4*	50	
	14.7	63	*1.2*	**2.8**	100	*1.1*	60	
	11.0	73	*0.9*	**2.1**	116	*0.8*	80	
	8.8	82	*0.8*	**1.7**	129	*0.7*	100	
	14.7	66	*2.1*	**2.8**	105	*2.0*	60	**CMV 063/018**
	11.0	79	*1.6*	**2.1**	122	*1.5*	80	
	8.8	89	*1.4*	**1.7**	133	*1.2*	100	
0.37								
63C2 n_1=2800 [min^{-1}]	**352**	7	*5.5*	**68.0**	16	*3.8*	5	**CMV 040/018**
	235	11	*4.0*	**45.3**	23	*2.8*	7.5	
	176	14	*3.2*	**34.0**	30	*2.2*	10	
	117	21	*2.2*	**22.7**	42	*1.6*	15	
	88.0	27	*1.5*	**17.0**	53	*1.1*	20	
	70.4	31	*1.2*	**13.6**	63	*0.8*	25	
	58.7	36	*1.3*	**11.3**	72	*1.0*	30	
	44.0	44	*1.0*	**8.5**	88	*0.7*	40	
	88.0	27	*2.7*	**17.0**	54	*1.9*	20	**CMV 050/018**
	70.4	32	*2.2*	**13.6**	64	*1.4*	25	
	58.7	37	*2.4*	**11.3**	74	*1.7*	30	
	44.0	46	*1.7*	**8.5**	90	*1.2*	40	
	35.2	54	*1.3*	**6.8**	105	*1.0*	50	
	29.3	61	*1.1*	**5.7**	116	*0.8*	60	
	35.2	56	*2.4*	**6.8**	108	*1.8*	50	**CMV 063/018**
	29.3	64	*2.0*	**5.7**	121	*1.5*	60	
	22.0	78	*1.5*	**4.3**	143	*1.1*	80	
	17.6	88	*1.3*	**3.4**	160	*0.9*	100	
71B4 n_1=1400 [min^{-1}]	**200**	13	*3.6*	**40.0**	24	*3.3*	5	**CMV 040/037**
	133	19	*2.7*	**26.7**	35	*2.4*	7.5	
	100	25	*2.1*	**20.0**	45	*1.9*	10	
	66.7	35	*1.6*	**13.3**	62	*1.4*	15	
	50.0	44	*1.0*	**10.0**	80	*0.9*	20	
	40.0	53	*0.8*	**8.0**	96	*0.7*	25	
	33.3	59	*0.9*	**6.7**	103	*0.9*	30	

P_1 [kW]	velocità massima *max speed* n_2 [min^{-1}]	M_2 [Nm]	sf	velocità minima *min speed* n_2 [min^{-1}]	M_2 [Nm]	sf	i	
0.37								
71B4 n_1=1400 [min^{-1}]	**66.7**	36	*2.7*	**13.3**	65	*2.5*	15	**CMV 050/037**
	50.0	45	*1.8*	**10.0**	82	*1.7*	20	
	40.0	54	*1.4*	**8.0**	96	*1.3*	25	
	33.3	61	*1.6*	**6.7**	104	*1.6*	30	
	25.0	74	*1.1*	**5.0**	127	*1.1*	40	
	20.0	89	*0.9*	**4.0**	144	*0.9*	50	
	16.7	99	*0.8*	**3.3**	158	*0.7*	60	
	25.0	78	*2.1*	**5.0**	130	*2.0*	40	**CMV 063/037**
	20.0	92	*1.6*	**4.0**	150	*1.5*	50	
	16.7	104	*1.4*	**3.3**	166	*1.3*	60	
	12.5	125	*1.0*	**2.5**	192	*1.0*	80	
	10.0	141	*0.9*	**2.0**	210	*0.8*	100	
	16.7	110	*2.1*	**3.3**	176	*2.0*	60	**CMV 075/037**
	12.5	132	*1.6*	**2.5**	206	*1.5*	80	
	10.0	150	*1.3*	**2.0**	228	*1.2*	100	
	10.0	165	*1.9*	**2.0**	252	*1.7*	100	**CMV 090/037**
0.55								
71B2 n_1=2800 [min^{-1}]	**400**	10	*3.6*	**80.0**	25	*2.4*	5	**CMV 040/037**
	267	14	*2.6*	**53.3**	37	*1.8*	7.5	
	200	19	*2.1*	**40.0**	47	*1.4*	10	
	133	27	*1.5*	**26.7**	66	*1.0*	15	
	100	35	*1.0*	**20.0**	84	*0.7*	20	
	400	65	*6.6*	**80**	26	*4.4*	5	**CMV 050/037**
	267	15	*4.7*	**53.3**	37	*3.2*	7.5	
	200	19	*3.8*	**40.0**	48	*2.5*	10	
	133	28	*2.6*	**26.7**	68	*1.7*	15	
	100	36	*1.8*	**20.0**	85	*1.2*	20	
	80.0	43	*1.4*	**16.0**	101	*0.9*	25	
	66.7	49	*1.6*	**13.3**	117	*1.1*	30	
	50.0	62	*1.1*	**10.0**	142	*0.8*	40	
	100	36	*3.3*	**20.0**	88	*2.1*	20	**CMV 063/037**
	80.0	44	*2.6*	**16.0**	105	*1.6*	25	
	66.7	51	*2.9*	**13.3**	115	*2.0*	30	
	50.0	64	*2.0*	**10.0**	144	*1.4*	40	
	40.0	76	*1.6*	**8.0**	171	*1.1*	50	
	33.3	87	*1.3*	**6.7**	191	*0.9*	60	
	25.0	107	*1.0*	**5.0**	226	*0.7*	80	
	50.0	66	*3.2*	**10.0**	156	*2.2*	40	**CMV 075/037**
	40.0	78	*2.4*	**8.0**	183	*1.7*	50	
	33.3	91	*2.0*	**6.7**	205	*1.4*	60	
	25.0	113	*1.5*	**5.0**	240	*1.0*	80	
	20.0	130	*1.2*	**4.0**	270	*0.8*	100	
	33.3	95	*3.1*	**6.7**	212	*2.2*	60	**CMV 090/037**
	25.0	118	*2.3*	**5.0**	254	*1.6*	80	
	20.0	139	*1.8*	**4.0**	288	*1.3*	100	

Dati tecnici

Technical data

P_1 [kW]	velocità massima *max speed* n_2 [min^{-1}]	M_2 [Nm]	sf	velocità minima *min speed* n_2 [min^{-1}]	M_2 [Nm]	sf	i	
0.75								
80B4 n_1=1400 [min^{-1}]	**200**	26	*3.4*	**40**	49	*3.0*	5	**CMV 050/075**
	133	38	*2.4*	**26.7**	71	*2.2*	7.5	
	100	50	*1.9*	**20.0**	91	*1.7*	10	
	66.7	71	*1.3*	**13.3**	130	*1.2*	15	
	50.0	90	*0.9*	**10.0**	163	*0.8*	20	
	40.0	108	*0.7*	**8.0**	192	*0.6*	25	
	33.3	122	*0.8*	**6.7**	209	*0.8*	30	
	66.7	73	*2.4*	**13.3**	128	*2.4*	15	**CMV 063/075**
	50.0	94	*1.6*	**10.0**	161	*1.6*	20	
	40.0	113	*1.2*	**8.0**	189	*1.2*	25	
	33.3	126	*1.5*	**6.7**	216	*1.4*	30	
	25.0	156	*1.0*	**5.0**	259	*1.0*	40	
	20.0	183	*0.8*	**4.0**	300	*0.8*	50	
	40.0	110	*2.1*	**8.0**	198	*1.9*	25	**CMV 075/075**
	33.3	122	*2.5*	**6.7**	227	*2.3*	30	
	25.0	154	*1.7*	**5.0**	274	*1.6*	40	
	20.0	192	*1.3*	**4.0**	318	*1.2*	50	
	16.7	220	*1.1*	**3.3**	353	*1.0*	60	
	12.5	264	*0.8*	**2.5**	413	*0.7*	80	
	25.0	173	*2.7*	**5.0**	293	*2.6*	40	**CMV 090/075**
	20.0	204	*2.0*	**4.0**	342	*1.9*	50	
	16.7	234	*1.6*	**3.3**	382	*1.5*	60	
	12.5	288	*1.2*	**2.5**	451	*1.1*	80	
	10.0	330	*1.0*	**2.0**	504	*0.9*	100	
	12.5	302	*2.0*	**2.5**	490	*1.8*	80	**CMV 110/075**
	10.0	354	*1.6*	**2.0**	552	*1.4*	100	
1.1								
80B2 n_1=2800 [min^{-1}]	**400**	20	*3.2*	**80**	51	*2.2*	5	**CMV 050/075**
	267	29	*2.3*	**53.3**	75	*1.6*	7.5	
	200	38	*1.9*	**40.0**	96	*1.3*	10	
	133	55	*1.3*	**26.7**	135	*0.9*	15	
	400	20	*5.8*	**80**	53	*3.7*	5	**CMV 063/075**
	267	29	*4.2*	**53.3**	76	*2.8*	7.5	
	200	38	*3.4*	**40.0**	98	*2.2*	10	
	133	56	*2.4*	**26.7**	139	*1.6*	15	
	100	72	*1.6*	**20.0**	175	*1.1*	20	
	80.0	88	*1.3*	**16.0**	210	*0.8*	25	
	66.7	102	*1.4*	**13.3**	230	*1.0*	30	
	50.0	128	*1.0*	**10.0**	288	*0.7*	40	
	100	74	*2.7*	**20.0**	180	*1.7*	20	**CMV 075/075**
	80.0	90	*2.0*	**16.0**	216	*1.3*	25	
	66.7	104	*2.3*	**13.3**	252	*1.5*	30	
	50.0	132	*1.6*	**10.0**	312	*1.1*	40	
	40.0	158	*1.2*	**8.0**	366	*0.8*	50	
	33.3	182	*1.0*	**6.7**	410	*0.7*	60	
	66.7	107	*3.8*	**13.3**	252	*2.5*	30	**CMV 090/075**
	50.0	137	*2.6*	**10.0**	317	*1.8*	40	
	40.0	165	*1.9*	**8.0**	366	*1.4*	50	
	33.3	190	*1.5*	**6.7**	425	*1.1*	60	
	25.0	236	*1.1*	**5.0**	509	*0.8*	80	
	20.0	277	*0.9*	**4.0**	576	*0.6*	100	

P_1 [kW]	velocità massima *max speed* n_2 [min^{-1}]	M_2 [Nm]	sf	velocità minima *min speed* n_2 [min^{-1}]	M_2 [Nm]	sf	i	
1.1								
80B2 n_1=2800 [min^{-1}]	**40.0**	169	*3.4*	**8.0**	390	*2.3*	50	**CMV 110/075**
	33.3	198	*2.6*	**6.7**	446	*1.8*	60	
	25.0	246	*1.9*	**5.0**	547	*1.3*	80	
	20.0	290	*1.5*	**4.0**	624	*1.0*	100	
90S4 n_1=1400 [min^{-1}]	**200**	40	*4.0*	**40**	74	*3.8*	5	**CMV 063/15**
	133	58	*2.9*	**26.7**	108	*2.7*	7.5	
	100	76	*2.3*	**20.0**	139	*2.1*	10	
	66.7	109	*1.6*	**13.3**	192	*1.6*	15	
	50.0	140	*1.1*	**10.0**	241	*1.1*	20	
	40.0	169	*0.8*	**8.0**	284	*0.8*	25	
	33.3	189	*1.0*	**6.7**	324	*1.0*	30	
	50.0	144	*1.8*	**10.0**	248	*1.7*	20	**CMV 075/15**
	40.0	173	*1.3*	**8.0**	297	*1.3*	25	
	33.3	197	*1.6*	**6.7**	340	*1.5*	30	
	25.0	245	*1.1*	**5.0**	410	*1.1*	40	
	25.0	259	*1.8*	**5.0**	439	*1.7*	40	**CMV 090/15**
	20.0	306	*1.4*	**4.0**	513	*1.2*	50	
	16.7	351	*1.1*	**3.3**	572	*1.0*	60	
	16.7	367	*1.9*	**3.3**	616	*1.6*	60	**CMV 110/15**
	12.5	454	*1.3*	**2.5**	734	*1.2*	80	
	10.0	531	*1.0*	**2.0**	828	*0.9*	100	
1.5								
90L4 n_1=1400 [min^{-1}]	**200**	53	*3.0*	**40**	98	*2.8*	5	**CMV 063/15**
	133	77	*2.2*	**26.7**	144	*2.0*	7.5	
	100	101	*1.7*	**20.0**	185	*1.6*	10	
	66.7	146	*1.2*	**13.3**	256	*1.2*	15	
	50.0	187	*0.8*	**10.0**	322	*0.8*	20	
	133	78	*3.3*	**26.7**	146	*3.1*	7.5	**CMV 075/15**
	100	102	*2.7*	**20.0**	187	*2.5*	10	
	66.7	149	*2.0*	**13.3**	263	*1.9*	15	
	50.0	192	*1.3*	**10.0**	331	*1.3*	20	
	40.0	231	*1.0*	**8.0**	396	*1.0*	25	
	33.3	263	*1.2*	**6.7**	454	*1.1*	30	
	25.0	326	*0.8*	**5.0**	547	*0.8*	40	
	133	79	*4.9*	**26.7**	149	*4.4*	7.5	**CMV 090/15**
	100	104	*4.0*	**20.0**	192	*3.6*	10	
	66.7	151	*3.1*	**13.3**	270	*3.0*	15	
	50.0	197	*2.2*	**10.0**	346	*2.2*	20	
	40.0	240	*1.6*	**8.0**	414	*1.6*	25	
	33.3	274	*1.9*	**6.7**	475	*1.8*	30	
	25.0	346	*1.3*	**5.0**	586	*1.3*	40	
	20.0	408	*1.0*	**4.0**	684	*0.9*	50	
	16.7	468	*0.8*	**3.3**	763	*0.8*	60	
	40.0	243	*2.9*	**8.0**	432	*2.8*	25	**CMV 110/15**
	33.3	270	*3.2*	**6.7**	482	*3.1*	30	
	25.0	350	*2.4*	**5.0**	624	*2.1*	40	
	20.0	426	*1.8*	**4.0**	732	*1.6*	50	
	16.7	490	*1.4*	**3.3**	821	*1.2*	60	
	12.5	586	*1.0*	**2.5**	979	*0.9*	80	
	10.0	710	*0.8*	**2.0**	1104	*0.7*	100	

Dati tecnici

Technical data

P_1 [kW]	velocità massima *max speed* n_2 [min^{-1}]	M_2 [Nm]	sf	velocità minima *min speed* n_2 [min^{-1}]	M_2 [Nm]	sf	i	
1.5								
90L4 n_1=1400 [min^{-1}]	**20.0**	438	*2.4*	**4.0**	732	*2.0*	50	**CMV 130/15**
	16.7	504	*1.9*	**3.3**	821	*1.7*	60	
	12.5	614	*1.4*	**2.5**	979	*1.2*	80	
	10.0	708	*1.1*	**2.0**	1152	*1.0*	100	
2.2								
90L2 n_1=2800 [min^{-1}]	**400**	41	*2.8*	**80.0**	105.6	*1.9*	5	**CMV 063/15**
	267	60	*2.0*	**53.3**	151	*1.4*	7.5	
	200	78	*1.6*	**40.0**	197	*1.1*	10	
	133	115	*1.2*	**26.7**	277	*0.8*	15	
	267	60	*3.1*	**53.3**	151	*2.1*	7.5	**CMV 075/15**
	200	79	*2.6*	**40.0**	199	*1.7*	10	
	133	115	*1.9*	**26.7**	284	*1.2*	15	
	100	151	*1.3*	**20.0**	360	*0.9*	20	
	80.0	185	*1.0*	**16.0**	432	*0.6*	25	
	66.7	213	*1.1*	**13.3**	504	*0.7*	30	
	267	61	*4.5*	**53.3**	153	*3.1*	7.5	**CMV 090/15**
	200	80	*3.8*	**40.0**	202	*2.5*	10	
	133	117	*3.0*	**26.7**	292	*1.9*	15	
	100	153	*2.2*	**20.0**	374	*1.4*	20	
	80.0	189	*1.6*	**16.0**	450	*1.0*	25	
	66.7	219	*1.8*	**13.3**	504	*1.3*	30	
	50.0	281	*1.3*	**10.0**	634	*0.9*	40	
	40.0	338	*0.9*	**8.0**	732	*0.7*	50	
	80.0	191	*2.8*	**16.0**	462	*1.8*	25	**CMV 110/15**
	66.7	219	*3.1*	**13.3**	518	*2.0*	30	
	50.0	288	*2.2*	**10.0**	662	*1.5*	40	
	40.0	347	*1.7*	**8.0**	780	*1.2*	50	
	33.3	405	*1.3*	**6.7**	893	*0.9*	60	
	25.0	504	*0.9*	**5.0**	1094	*0.7*	80	
	50.0	281	*3.1*	**10.0**	653	*1.9*	40	**CMV 130/15**
	40.0	347	*2.4*	**8.0**	804	*1.5*	50	
	33.3	405	*1.9*	**6.7**	922	*1.2*	60	
	25.0	504	*1.4*	**5.0**	1114	*0.9*	80	
	20.0	603	*1.0*	**4.0**	1272	*0.7*	100	
100LA4 n_1=1400 [min^{-1}]	**133**	117	*2.2*	**26.7**	219	*2.0*	7.5	**CMV 075/22**
	100	153	*1.8*	**20.0**	281	*1.7*	10	
	66.7	224	*1.3*	**13.3**	394	*1.2*	15	
	133	119	*3.2*	**26.7**	224	*2.9*	7.5	**CMV 090/22**
	100	157	*2.7*	**20.0**	288	*2.4*	10	
	66.7	227	*2.1*	**13.3**	405	*2.0*	15	
	50.0	295	*1.5*	**10.0**	518	*1.4*	20	
	40.0	360	*1.1*	**8.0**	621	*1.1*	25	
	33.3	410	*1.3*	**6.7**	713	*1.2*	30	
	133	119	*5.7*	**26.7**	224	*5.1*	7.5	**CMV 110/22**
	100	157	*4.7*	**20.0**	292	*4.3*	10	
	66.7	227	*3.5*	**13.3**	410	*3.3*	15	
	50.0	299	*2.5*	**10.0**	540	*2.4*	20	
	40.0	369	*1.9*	**8.0**	648	*1.9*	25	
	33.3	421	*2.1*	**6.7**	724	*2.0*	30	
	25.0	540	*1.5*	**5.0**	936	*1.4*	40	
	20.0	639	*1.2*	**4.0**	1098	*1.1*	50	
	16.7	734	*0.9*	**3.3**	1231	*0.8*	60	

P_1 [kW]	velocità massima *max speed* n_2 [min^{-1}]	M_2 [Nm]	sf	velocità minima *min speed* n_2 [min^{-1}]	M_2 [Nm]	sf	i	
2.2								
100LA4 n_1=1400 [min^{-1}]	**33.3**	416	*2.8*	**6.7**	713	*2.4*	30	**CMV 130/22**
	25.0	533	*2.1*	**5.0**	907	*1.8*	40	
	20.0	657	*1.6*	**4.0**	1098	*1.4*	50	
	16.7	756	*1.3*	**3.3**	1231	*1.1*	60	
	12.5	922	*1.0*	**2.5**	1469	*0.8*	80	
3								
100LB4 n_1=1400 [min^{-1}]	**133**	157	*1.7*	**26.7**	292	*1.5*	7.5	**CMV 075/40**
	100	204	*1.3*	**20.0**	374	*1.3*	10	
	66.7	299	*1.0*	**13.3**	526	*0.9*	15	
	133	158	*2.4*	**26.7**	299	*2.2*	7.5	**CMV 090/40**
	100	209	*2.0*	**20.0**	384	*1.8*	10	
	66.7	302	*1.6*	**13.3**	540	*1.5*	15	
	50.0	394	*1.1*	**10.0**	691	*1.1*	20	
	40.0	480	*0.8*	**8.0**	828	*0.8*	25	
	33.3	547	*1.0*	**6.7**	950	*0.9*	30	
	66.7	317	*2.5*	**13.3**	598	*1.9*	15	**CMV 110/40**
	50.0	418	*1.8*	**10.0**	778	*1.6*	20	
	40.0	504	*1.4*	**8.0**	912	*1.5*	25	
	33.3	598	*1.5*	**6.7**	1080	*1.2*	30	
	25.0	787	*1.1*	**5.0**	1382	*0.9*	40	
	20.0	936	*0.8*	**4.0**	1608	*0.9*	50	
	16.7	1080	*0.6*	**3.3**	1872	*0.7*	60	
	40.0	486	*2.2*	**8.0**	876	*1.7*	25	**CMV 130/40**
	33.3	554	*2.1*	**6.7**	950	*1.8*	30	
	25.0	710	*1.5*	**5.0**	1210	*1.3*	40	
	20.0	876	*1.2*	**4.0**	1464	*1.0*	50	
	16.7	1008	*1.0*	**3.3**	1642	*0.9*	60	
	12.5	1229	*0.7*	**2.5**	1958	*0.6*	80	
4								
112M4 n_1=1400 [min^{-1}]	**133**	211	*1.8*	**26.7**	398	*1.7*	7.5	**CMV 090/40**
	100	278	*1.5*	**20.0**	512	*1.4*	10	
	66.7	403	*1.2*	**13.3**	720	*1.1*	15	
	50.0	525	*0.8*	**10.0**	922	*0.8*	20	
	100	275	*2.7*	**20.0**	518	*2.4*	10	**CMV 110/40**
	66.7	398	*2.0*	**13.3**	739	*1.8*	15	
	50.0	525	*1.4*	**10.0**	973	*1.3*	20	
	40.0	648	*1.1*	**8.0**	1184	*1.0*	25	
	33.3	720	*1.2*	**6.7**	1248	*1.2*	30	
	25.0	960	*0.9*	**5.0**	1664	*0.8*	40	
	40.0	648	*1.6*	**8.0**	1168	*1.3*	25	**CMV 130/40**
	33.3	739	*1.6*	**6.7**	1267	*1.3*	30	
	25.0	947	*1.2*	**5.0**	1613	*1.0*	40	
	20.0	1168	*0.9*	**4.0**	1952	*0.8*	50	
	16.7	1344	*0.7*	**3.3**	2189	*0.6*	60	

Dimensioni — *Dimensions*

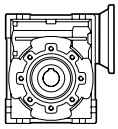

CM

	CM.. - CM..F - CM..FB - CM..FL																							
	A	C	D H8	E	F	G	G1	H	I	L	M	N h8	N1	O	P	Q	R	S	T	V	K	KE	a	b	t
040	70	100	18	121.5	43	70	78	50	40	71	75	60	36.5	6.5	87	55	71.5	6.5	26	35	60	M6x8 (n.4)	45°	6	20.8
050	80	120	25	144	49	80	92	60	50	85	85	70	43.5	8.5	100	64	84	7	30	40	70	M8x10 (n.4)	45°	8	28.3
063	100	144	25	174	67	95	112	72	63	103	95	80	53	8.5	110	80	102	8	36	50	85	M8x10 (n.8)	45°	8	28.3
075	120	172	28	205	72	112.5	120	86	75	112	115	95	57	11	140	93	119	10	40	60	90	M8x14 (n.8)	45°	8	31.3
090	140	205	35	238	74	129.5	140	102.5	90	130	130	110	67	13	160	102	135	11	45	70	100	M10x18 (n.8)	45°	10	38.3
110	170	252.5	42	295	—	160	155	127.5	110	144	165	130	74	14	200	125	167.5	14	50	85	115	M10x18 (n.8)	45°	12	45.3
130	200	292.5	45	335	—	180	170	147.5	130	155	215	180	81	16	250	140	187.5	15	60	100	120	M12x21 (n.8)	45°	14	48.8

		CM..F								CM..FB							CM..FL							
	a1	KA	KB	KC	KM	KN H8	KO	KP	KQ	KA	KB	KC	KM	KN H8	KO	KP	KA	KB	KC	KM	KN H8	KO	KP	KQ
040	45°	67	7.5	4	80-95	60	9(n.4)	110	95	80	8.5	5	115-125	95	9.5(n.4)	140	97	7.5	4.5	80-95	60	9(n.4)	110	95
050	45°	90	9	5	90-110	70	11(n.4)	125	110	89	9	5	130-145	110	9.5(n.4)	160	120	9	5	90-110	70	11(n.4)	125	110
063	45°	82	10	6	150-160	115	11(n.4)	180	142	98	10	5	165-180	130	11(n.4)	200	112	10	6	150-160	115	11(n.4)	180	142
075	45°	111	13	6	165-180	130	14(n.4)	200	170	—	—	—	—	—	—	—	—	—	—	—	—	—	—	—
090	45°	111	13	6	175-190	152	14(n.4)	210	200	—	—	—	—	—	—	—	—	—	—	—	—	—	—	—
110	45°	131	15	6	230	170	14(n.8)	280	260	—	—	—	—	—	—	—	—	—	—	—	—	—	—	—
130	45°	140	15	6	255	180	16(n.8)	320	290	—	—	—	—	—	—	—	—	—	—	—	—	—	—	—

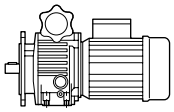

VAM

	VAM							
	V2	V3	VC	VF	VL	VR	VR1	VS
018	112.5	64.5	71	111	78	110	110	85
037	110	74	71	123	90	110	110	85
075	139	85.5	79	140	107	120	120	85
15	188	115	100	144	122	120	120	85
22	208	131	135	188	150	150	150	110
40	208	131	135	188	150	150	150	110

Dimensioni — *Dimensions*

CMV..

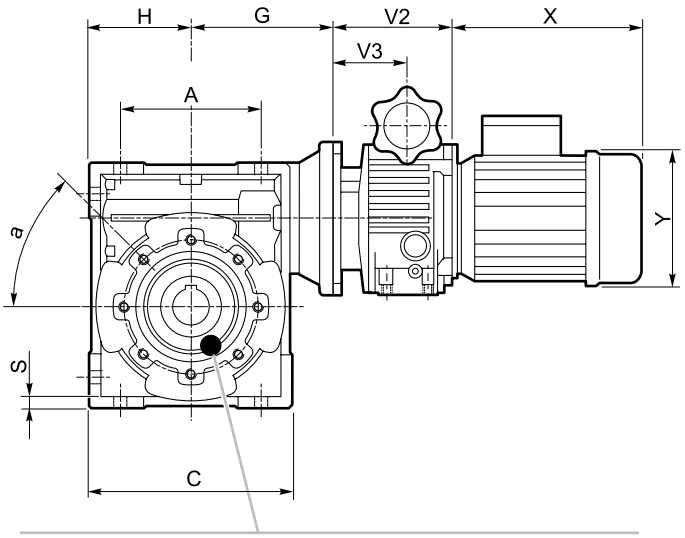

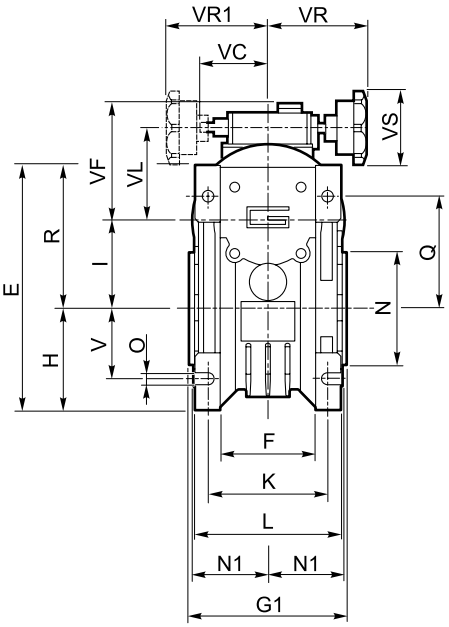

CMV..U

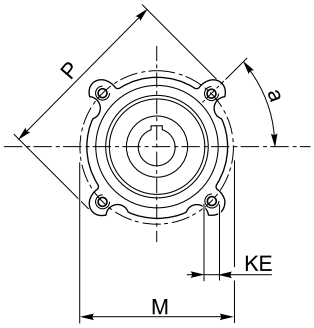

../040
../050

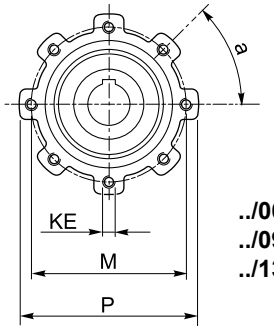

../063 ../075
../090 ../110
../130

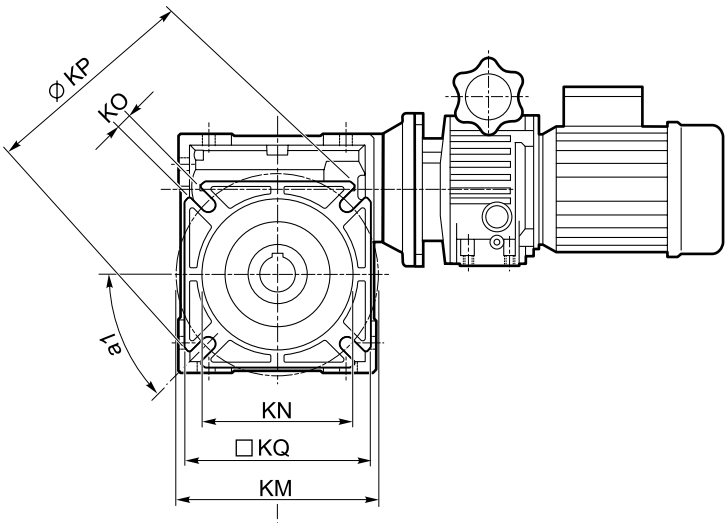

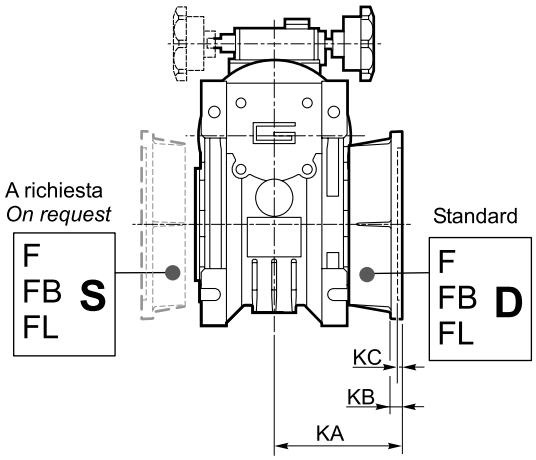

CMV..F (../040 - ../090)
CMV..FB (../040 - ../063)
CMV..FL (../040 - ../063)

CMV..F
(../110 ../130)

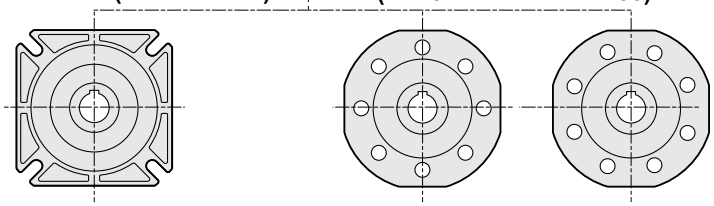

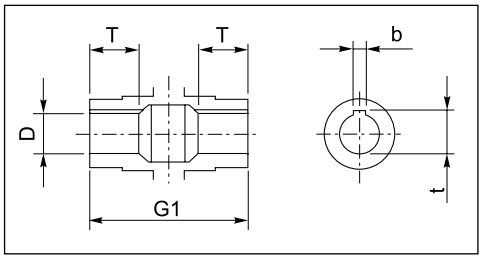

Albero lento cavo / *Hollow output shaft*

Accessori / *Accessories*

Albero lento semplice e doppio / *Single and double output shaft*

	d h7	B	B1	G1	L	L1	f	b1	t1
CM 040	18	40	43	78	128	164	M6	6	20.5
CM 050	25	50	53.5	92	153	199	M10	8	28
CM 063	25	50	53.5	112	173	219	M10	8	28
CM 075	28	60	63.5	120	192	247	M10	8	31
CM 090	35	80	84.5	140	234	309	M12	10	38
CM 110	42	80	84.5	155	249	324	M16	12	45
CM 130	45	80	85	170	265	340	M16	14	48.5

SZ

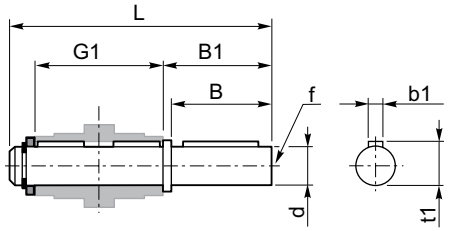

DZ

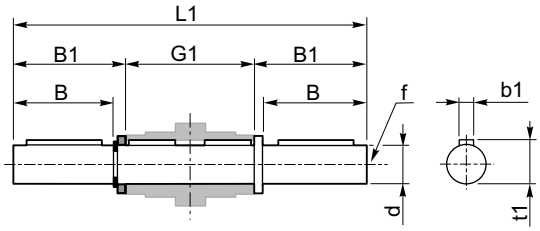

Braccio di reazione / *Torque arm*

	K1	G	KG	KH	R
CM 040	100	14	31	10	18
CM 050	100	14	38	10	18
CM 063	150	14	47.5	10	18
CM 075	200	25	46.5	20	30
CM 090	200	25	56.5	20	30
CM 110	250	30	62	25	35
CM 130	250	30	69	25	35

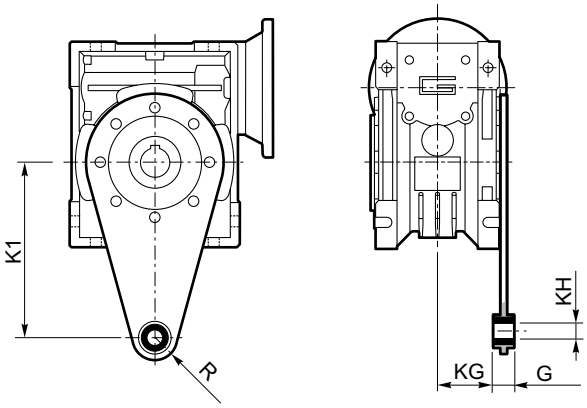

Opzioni / *Options*

VS - Vite sporgente / *Extended input shaft*

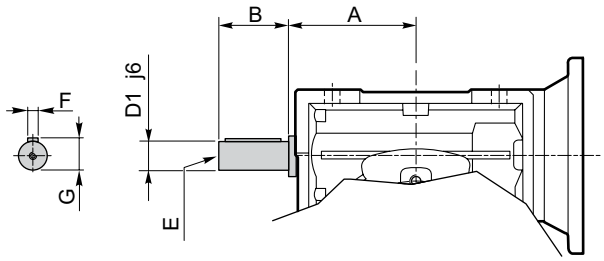

	A	B	D_1 j6	E	F	G
CM 040	53	23	11	M5	4	12.5
CM 050	64	30	14	M6	5	16
CM 063	75	40	19	M6	6	21.5
CM 075	90	50	24	M8	8	27
CM 090	108	50	24	M8	8	27
CM 110	135	60	28	M10	8	31
CM 130	—	—	—	—	—	—

SC - *Safety cover*

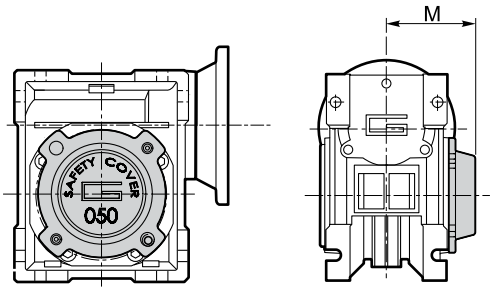

	M
CM 040	54.5
CM 050	62.5
CM 063	73
CM 075	79
CM 090	94
CM 110	102
CM 130	117